Archives of Occupational Health | Volume 5 | Issue 2 | April 2021 | 1012-21

Original

Presenting a Method for Evaluating the Safety Risk Management Process in Industries Using Fuzzy Logic Approach

Hamidreza Mehri[1], Faeze Sepahi-Zoeram[2], Ali Karimi[3*], Farideh Golbabaei[3]

[1]Instructor, Department of Occupational Health Engineering, School of Public Health, North Khorasan University of Medical Sciences, Bojnurd, Iran• [2]MSc, Occupational Health Research Center, School of Public Health, Shahid Sadoughi University of Medical Sciences, Yazd, Iran• [3]Department of Occupational health, School of Public Health, Tehran University of Medical Sciences, Tehran, Iran• *Corresponding author: Ali Karimi, E-mail: Alikarimi57@gmail.com, Tel:+98-910-9902142

Abstract

Background: An effective process for preventing industrial accidents basically requires a thorough study of the environment, data collection, evaluation, and analysis of this information, determination of corrective action, and its implementation. Risk management provides an integrated framework for this important process. The purpose of this study was to identify the parameters of the risk management process, combine these parameters by fuzzy logic and construct a fuzzy model to obtain the risk management index and finally design a questionnaire with Likert scale to obtain the inputs of this model to evaluate the risk management process. **Methods:** This descriptive cross-sectional study was conducted in 2018 in Tehran. First, based on library studies and experts' opinions, Jaques non-linear crisis management model was selected, and based on this model, the parameters of the risk management process were extracted. Then, a questionnaire with 22 questions was designed to measure these parameters, the content and face validity of which were evaluated. Also, to evaluate the reliability of the questionnaire, the test-retest method and Cronbach's alpha coefficient were used. Then the parameters were defined as fuzzy numbers, the Fuzzy inference engine was programmed using fuzzy rules, and its validity was evaluated. **Results:** The fuzzy model has three stages, in each of which sixteen rules are used. In this fuzzy model, the defuzzification step was performed by four methods with the same results. The designed questionnaire contains twenty-two questions, the content validity ratio (CVR) for this questionnaire is 0.89, and the content validity index (CVI) for all questions was above 0.79. Cronbach's alpha coefficient for this questionnaire was 0.713. Face validity was determined quantitatively by calculating the impact score (more than 1.5). Using intraclass correlation coefficient and Pearson correlation coefficient, the existence of reliability between test times (test-retest) was confirmed, so that their values were 0.84 and 0.88%, respectively. **Conclusion:** The proposed fuzzy model has a high validity giving a correct evaluation of the risk management process and expressing the final result in the form of an index between zero and one hundred. The risk management process evaluation questionnaire has good validity and reliability with the interpretation that the item has good face validity and is understandable, simple, and fluent for the sample group. Using this tool, industry managers can evaluate the safety risk management process, making them able to identify the strengths and weaknesses of this process, and finally take steps to eliminate the defects and improve this process continuously.

Keywords: Questionnaire design; Risk identification; Risk prioritization; MATLAB Software; Validity; Reliability

Introduction

A wide range of new regulations and legal changes has increased the need for better risk assessment and management.[1] Studies show that risk management is gaining global attention,[2] and companies consider risk management as one of their main goals.[3] Quantitative risk assessment and

Citation: Mehri H, Sepahi-Zoeram F, Karimi A, Golbabaei F. **Presenting a Method for Evaluating the Safety Risk Management Process in Industries Using Fuzzy Logic Approach.** Archives of Occupational Health. 2021; 5(2): 1012-21.
Article History: Received: 26 January 2019; Revised: 30 April 2019; Accepted: 09 July 2019
Copyright: ©2021 The Author(s); Published by Shahid Sadoughi University of Medical Sciences. This is an open-access article distributed under the terms of the Creative Commons Attribution License (https://creativecommons.org/licenses/by/4.0/), which permits unrestricted use, distribution, and reproduction in any medium, provided the original work is properly cited.

management is one of the most popular methods of control. And risk management in the chemical and process industries.[4, 5] On the other hand, government officials consider risk management one of the most important responsibilities of industry managers,[6, 7] but customers' expectations about risk management are much higher than.[8]A study conducted by fuzzy hierarchical analysis found that the risk management process is the most important factor in the prevention of industrial accidents and crises with a relative weight of 0.44.[9]

Despite the necessity, benefits, and effectiveness of implementing risk management systems,[10, 11] various researchers have stated that organizations that successfully implement RMS are still a small minority that does not exceed 25%, according to optimistic reports.[12, 13] There is good knowledge about the design and implementation of various RMS processes such as risk management planning, risk identification, risk assessment, risk analysis, and risk response planning,[14-18] there are still no universally approved standards or guidelines for Helping organizations to design and implement a successful risk management system does not exist without limiting the type of business. Valuable efforts have been made to provide risk management standards and guidelines, but they have neither the global nor the general approval required. Most of these standards either require the clarity required by general guidelines or are limited to a wide range of business types.[19]

In the field of risk management, there is a need to develop knowledge about its effective factors. In addition, it is important to know how these factors relate to each other and what the risk management process should be. In this study, we have tried to identify risk management criteria, determine the importance of each of these criteria, and finally determine their characteristics, presented in the form of a questionnaire with a Likert scale. Using this questionnaire, the industries that have implemented the risk management system in their organization can evaluate this system and identify the weaknesses and strengths of their risk management system and take steps to eliminate the identified weaknesses and improve them

Methods

This cross-sectional descriptive-analytical study was conducted in 2018. The procedure consists of the following steps, which are generally shown in Figure 1.

Risk management criteria

Based on library studies and previous studies and using the opinions of experts in safety and risk management, the Jaques non-linear Crisis Management Model was selected, and based on this model, the parameters of the risk management process were extracted. According to this model, in order to effectively and efficiently carry out the risk management process, four factors must be implemented simultaneously: accurate risk identification, realistic risk prioritization, determining effective strategies, and finally implementing corrective measures.[20]

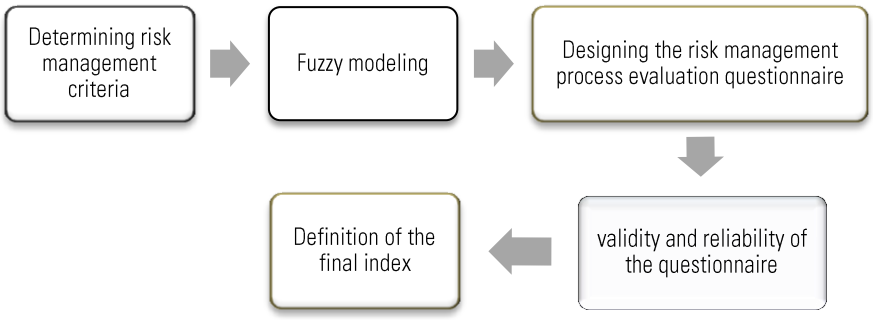

Figure 1. Study steps

Fuzzification

Professor Zadeh proposed a fuzzy set theory to deal with uncertainty, which is for human judgments useful in the decision-making process through the use of linguistic terms and degree of membership. A fuzzy set is a class of objects with a membership degree, while a normal membership function is between zero and one. At this stage, each of the parameters is defined using a fuzzy set.[21] After Karzadeh, Mamdani in 1974 examined the feasibility of using the Combined Inference Law.[22]Mamdani rules system has four parts:

Fuzzifier: Fuzzy inputs are displayed using the membership function to convert crisp inputs to fuzzy inputs. The membership function has several functional forms to represent different fuzzy positions, for example, linear shape, concave shape, and exponential shape. Two common types of membership functions are triangular and trapezoidal linear membership functions.

Rules: The main part of the FIS model is "rules." Fuzzy "if-then" rules are defined based on the knowledge of experts in each area. A fuzzy rule can be "if x1 is a1 and x2 is b1, then y equals c1" so that x1 and x2 are variables, y is a solution variable, and a1, b1, and c1 are fuzzy language terms.[23]

Inference Engine: The inference engine evaluates and deduces rules using inference algorithms.

Defuzzifier: Converts fuzzy output to crisp output. Among the four parts of FIS, the defuzzification process has the highest computational complexity, ultimately determining a numerical output value. Types of defuzzification include area center of the area (COA), the bisector of area (BOA), smallest of maximum (SOM), last of maximum (LOM), mean of maximum (MOM), weighted average (WA). In general, COA and WA have the most applications.[24]

Fuzzy triangular and trapezoidal numbers

In this study, fuzzy sets consisting of triangular and trapezoidal functions are used. A triangular fuzzy number consisting of A number with the membership function of linear fractions μA is defined as Figure 2.

Figure 3 shows a schematic view of the trapezoidal fuzzy number, and the formula in front of it shows the membership function of this number.

Each of the variables is defined as a triangular and trapezoidal fuzzy number, so these fuzzy numbers were chosen that have been used the most in previous articles, and their calculations are less complicated than the other numbers.

$$\mu_x(x) = \begin{cases} (x-a^l)/(a^m-a^l), & a^l \le x < a^m \\ 1, & x = a^m \\ (a^r-x)/(a^r-a^m), & a^m < x \le a^r \\ 0, & otherwise \end{cases}$$

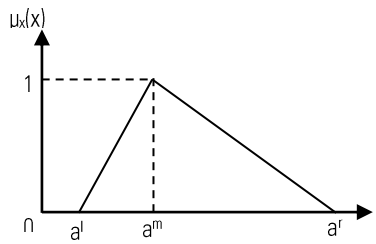

Figure 2. Schematic view of a triangular fuzzy number

$$\mu_x(x) = \begin{cases} 0 & x < a \\ \dfrac{x-a}{b-a} & a \le x \le b \\ 1 & b \le x \le c \\ \dfrac{d-x}{d-c} & c \le x \le d \\ 0 & x > d \end{cases}$$

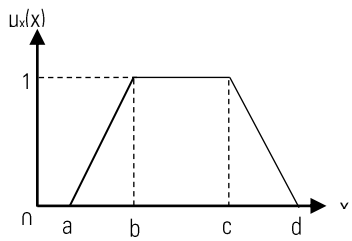

Figure 3. Schematic view of the trapezoidal fuzzy number

Fuzzy rules

In the following, rules for fuzzy calculations are formulated, which are such that they can accurately represent the real-world conditions. Regarding fuzzy rules, we need first to define their operators. There are three classes of fuzzy operators AND, OR, and NOT between the inputs, which determine their relationship mathematically. Their mathematical functions are as follows.

AND :$\mu_{A\cap B}(x) = \min(\mu_A(x).\mu_B(x))$

OR:$\mu_{A\cup B}(x) = \max(\mu_A(x).\mu_B(x))$

NOT:$\mu_{\bar{A}}(x) = 1 - \mu_A(x)$

Defuzzification

Defuzzification is the practice of converting fuzzy numbers to crisp numbers (natural numbers). In this study, the range of these crisp numbers is between zero and one hundred, i.e., finally, the readiness index will be determined with a number between zero and one hundred. In order to perform this step, the Center of Gravity method was used. This method, also known as Centroid Defuzzification, is one of the most widely used defragmentation methods.[24]The fuzzy system in this study uses the rules of the Mamdani fuzzy system that have been the most referenced in previous studies, and all construction and analysis of the fuzzy system of this study is done by MATLAB software version 16.2.

Fuzzy model validity

In this study, to measure the validity of the proposed model, several other defuzzification methods are used in addition to the center of gravity method,[25]methods such as BOA, MOM, and SOM, and the results are compared with the center of gravity method.

Defining the final index

In order to rank the points obtained, using the opinion of safety experts, we determined and defined four ranks so as not to create confusion and confusion for the evaluators, which is as follows:

Poor (score between 0 and 32.5): Critical situation, change, and intervention required immediately.

Medium (score between 32.5 to 57.5): The situation is relatively bad, and further study is needed to find the causes and intervention in the near future.

Strong (score between 57.5 and 72.5): Good condition and changes and intervention may be necessary.

Excellent (score between 72.5 to 100): Excellent condition.

Questionnaire design

The primary questionnaire was designed using various books and articles in the field of industrial risk management such as Guidelines for Risk-Based Process Safety: CCPS (Center for Chemical Process Safety) book[26] and also, discussions and consultations with three academic experts and two experts from the HSE department of an oil refinery. The Guidelines for Risk-Based Process Safety book provides guidelines for the chemical manufacturing, consumption, or transportation industries focusing on new ways of designing, modifying, or improving process safety management practices. This new framework for thinking about process safety was published based on core process safety management ideas in the early 1990s, integrating lessons learned during the intervening years, using general principles of applicable quality (i.e., planning, performing, reviewing, and operating). and organize it in a way that is beneficial to all organizations — even those with relatively low-risk activities — throughout the life of the industry.

Questionnaire validity

In order to evaluate and measure the company's success in implementing the risk management process, a questionnaire was designed with 22 questions. Questions 1 to 5 are related to the risk identification parameter, questions 6 to 10 are related to the risk prioritization parameter, questions 11 to 15 are related to the strategy determination parameter, and questions 16 to 22 are related to the implementation parameter. This questionnaire uses a five-point Likert scale so that the very poor option has a score of zero and a very good option has a score of 4.

Face validity

Face validity was assessed based on the opinions of 15 target population (refinery HSE department staff) regarding the difficulty of understanding concepts, ambiguity and misconceptions and the appropriateness and relevance of items separately. Furthermore, a 5-point Likert scale (5=extremely important, 4=important, 3=moderately important, 2= unimportant, and 1=extremely un-important) was used to determine the validity quantitatively through impact score as follows:

Impact score = frequency percentage ×significance score

Frequency percentage means the number of people who responded to the item, score 4 and 5 (important, simple, clear and completely important, simple and clear) and importance score means the average importance score based on the Likert range of answers from 1 up to 5.

Content validity

In order to evaluate the validity of the questionnaire, 10 qualified professionals in the field of occupational health and safety and risk management were asked to review the questionnaire, 5 of whom were academic specialists and the other 5 were industry experts with high practical knowledge. The purpose of this type of evaluation is to answer the question that whether the content of the tool can measure the defined purpose or not. Therefore, to evaluate the content validity, the judgment of experts in the field of interest is used. Content validity ratio (CVR) and content validity index (CVI) are used to quantitatively assess content validity. In order to measure the CVI index for each question, four options are considered: "completely relevant / simple / transparent", "relevant / simple / transparent but need minor revision", "need for fundamental revision" and "completely irrelevant / complicated / confusing". It is taken and experts are asked to rate the questions. The CVI index will be calculated as the sum of the agreeable scores for each item that scores "Relevant / Simple / Transparent but Needs Minor Review" and "Fully Related / Simple / Transparent" divided by the total number of professionals. In this way, the CVI index is calculated for all items. If the CVI score is higher than 0.79, the content validity of the scale is confirmed. To determine the CVR, experts are asked to review each item based on a three-part range of "necessary", "useful is not necessary" and "not necessary". Then the content validity ratio is calculated according to the following formula (1):

$$CVR = \frac{n_E - \frac{N}{2}}{\frac{N}{2}}$$

In this regard, n_E is the number of specialists who have answered the necessary option and N is the total number of specialists. If the calculated value is greater than the value of the table (Table 1), the validity of the content of that item is accepted.[27]

Questionnaire reliability

In order to measure the reliability of the questionnaire, Cronbach's alpha coefficient was used. At first, the questionnaire was completed by 43 staff members of the HSE department of an oil refinery in Iran. Cronbach's alpha coefficient is used to determine the reliability of a questionnaire that is designed as a Likert scale, and the answers are multiple choices.[28] The interval between the two assessments was two weeks. Also, the test-retest reliability was evaluated by calculating the Pearson correlation coefficient and Intra-Class Correlation Coefficient.

Results

Proposed fuzzy model

Membership functions for inputs and outputs.

Table 1. Minimum values of CVR[27]

Minimum amount of validity	Number of specialists panel
0.99	6
0.99	7
0.85	8
0.78	9
0.62	10
0.42	15

Table 2.Linguistic terms of inputs and outputs

membership functions	outputs	membership functions	inputs
[0,0,25,40]	(Weakly Prepared)	[0,0,25,40]	(Weak)
[25,40,50,65]	(Moderately Prepared)	[25,40,50,65]	(Moderate)
[50,65,70,85]	(Strongly Prepared)	[50,65,70,85]	(Strong)
[70,85,100,100]	(Extremely Prepared)	[70,85,100,100]	(Extreme)

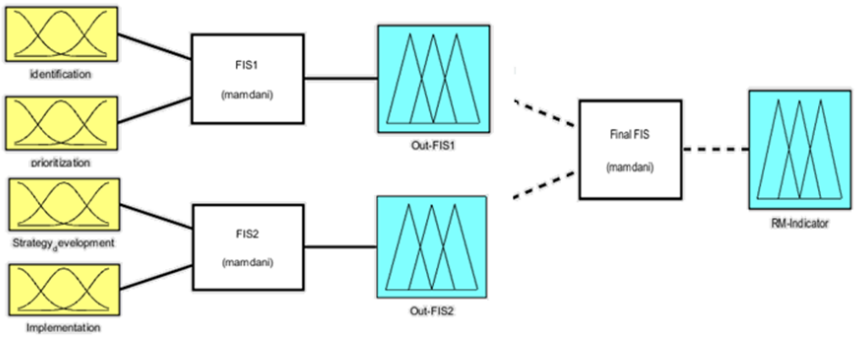

Figure 4. The steps of fuzzy model

Table3.Fuzzy rules

FIS1		Identification			
		W	M	S	E
prioritization	W	W	W	W	M
	M	W	M	M	S
	S	W	M	S	S
	E	M	S	E	E
FIS2		Strategy_development			
		W	M	S	E
Implementation	W	W	W	W	W
	M	W	M	M	M
	S	M	M	S	E
	E	M	S	E	E
Final FIS		Out-FIS1			
		W	M	S	E
Out-FIS2	W	W	W	W	W
	M	W	M	M	M
	S	M	M	S	E
	E	M	S	E	E

Table 4. Evaluation of a hypothetical

Ranking	Final Score	Defuzzification
Excellent	85.1	COM
Excellent	85	BOA
Excellent	90	MOM
Excellent	74	SOM

In the first step, four fuzzy sets of membership functions were defined for the inputs and outputs of FIS systems. Fuzzy sets in the form of linguistic variables are: "weak," "medium," "strong," and "excellent"; these variables are equal to the fuzzy number in the numerical scale 0-100 are presented in Table 2.

The fuzzy model in this study consists of three steps, which are shown in Figure 4.

As shown in the figure, in the first stage, the two parameters of identification and prioritization and in the second stage, the parameters of strategy formulation and implementation are combined in a fuzzy way, and two output variables called Out-FIS1 for the first stage and the variable Out-FIS2 created for the second phase; In the next step, these two output variables are used as inputs of the third step, and finally, the risk management index, RM-Indicator, is obtained. It should be noted that the risk management index is a score between zero and one hundred, which the closer this score is to one hundred, indicates the better status of the risk management system .In each of these steps, 16 fuzzy rules are used, which are given in Table 3. These rules are such that they can accurately reflect real-world conditions.

Validation of the proposed fuzzy model

An example was used for this purpose. Assuming that the risk identification parameter score is 87, the priority parameter score is 76, the strategy development parameter score is 91, and the implementation

parameter score is 68, the evaluation process was performed, and the results are presented in Table 4.As can be deduced from the table, the evaluation results using the BOA, MOM, and SOM methods are completely consistent with the result of the COM method, and all are rated "Excellent," which indicates the high validity of this model.

Questionnaire design

According to Table 6, the designed questionnaire has acceptable validity. The content validity ratio (CVR) for this questionnaire is 0.89, and the content validity index (CVI) is 0.86 for relevance, 0.89 for transparency, and 0.88 for simplicity. In quantitative face validity, the impact score was calculated, and the results showed an impact score above 1.5. Cronbach's alpha coefficient for this questionnaire was 0.713, the results of which are given in Table 5. To evaluate the reliability of the test-retest method, the intra-cluster correlation coefficient and Pearson correlation coefficient were calculated, the values of which were 84% and 88%, respectively, which are acceptable values Table 5.

Table 5. The results of Cronbach's alpha test and retest test

Dimensions of the questionnaire	Cronbach's alpha	Internal correlation coefficient	Pearson correlation coefficient	*P*-Value*
Accurate risk identification	0.78	0.97	0.92	<0.001
Realistic prioritization of risks	0.74	0.93	0.88	<0.001
Determine effective strategies	0.69	0.89	0.85	<0.001
Implement corrective actions	0.76	0.96	0.91	<0.001
The whole questionnaire	0.71	0.84	0.88	<0.001

* P-value criteria is equal 0.05

Table 6. The designed questionnaire

	Items	CVR	CVI		
			transparency	simplicity	relevance
1	Instructions for identifying hazards and risks (including the type of consequences and their severity, chemicals and processes, objectives of each analysis) are clearly prepared and formulated.	1	0.8	1	0.9
2	Forms and checklists for gathering the information needed to identify hazards and assess risks are prepared in a simple and appropriate manner.	0.8	0.9	0.9	0.8
3	The selection of appropriate methods for risk identification and risk analysis is done using a checklist or an appropriate guide.	1	0.9	1	0.8
4	Hazard identification and risk analysis are performed with appropriate technical accuracy, taking into account the industry life cycle and technical information related to the process.	1	0.8	0.8	0.9
5	The process of reporting identified hazards, risks, and recommendations from analysis and related forms is clearly defined and formulated.	1	0.8	0.9	1
6	Instructions related to risk tolerance indicators and acceptable risks have been prepared and compiled in the presence of management and other members of the risk management team.	0.8	1	0.9	0.8
7	Roles and responsibilities for prioritizing risks (manager, supervisor, and other members) are defined based on the knowledge and experience of individuals.	1	0.9	0.8	0.8
8	Members of the risk management team regularly attend safety seminars and courses. (In order to gain knowledge and familiarity with new standards)	1	0.8	0.9	0.9
9	Quantitative and qualitative indicators have been defined and developed in order to judge whether the risks are acceptable or not.	0.6	1	0.8	0.9
10	Management allocates the resources required by risk management programs as quickly as possible.	1	0.9	1	0.8
11	A guide to determining risk control strategies (including providing standard information and actions, engineering and management controls, asset integrity program controls, and constraints on operating operations) is well-defined and developed which is constantly updated.	1	0.8	0.8	0.9
12	Risk control measures are determined by the presence of a team consisting of operational, non-operational engineers and safety specialists.	1	1	1	0.8

	Items	CVR	CVI		
			transparency	simplicity	relevance
13	The appropriate selection of control measures is based on control priorities (engineering controls over managerial, passive controls over active, inherently safer approaches are preferred).	0.6	0.9	0.9	0.9
14	The identified strategies before implementation are evaluated with high accuracy in order to be effective (reduce the risk to an acceptable level).	1	0.9	0.8	0.8
15	The results and recommendations of the risk management process are periodically reviewed by responsible managers.	1	0.9	0.8	0.9
16	The process of implementing control measures, roles and responsibilities is defined and formulated in a simple and efficient manner.	1	0.9	0.9	0.8
17	The process of following up on control measures and related roles and responsibilities is clearly defined and applicable.	0.8	1	0.8	0.9
18	The identified hazards and risks and the relevant control measures are properly trained to the personnel and contractors through training classes, oral presentations, and etc..	0.8	0.8	0.9	0.8
19	Identified hazards and risks, control measures and residual risk are reported to local organizations such as the local fire department.	1	1	0.9	0.9
20	Guidelines for determining the effectiveness of corrective actions and related forms are appropriate and efficient.	0.6	0.8	0.8	0.9
21	The effectiveness of risk management program actions is continuously evaluated by defining risk impact indicators and performance.	0.8	1	0.9	0.8
22	The results and control measures of the risk management process are periodically reviewed and reviewed by responsible managers.	0.8	0.9	1	0.9
Total		0.89	0.89	0.88	0.86

Discussion

An effective preventative process basically requires careful study of the environment, data collection, evaluation, analysis of information, determination of corrective action, and implementation.[29] Risk management provides an integrated framework for this process. Risk management is a very vital and essential process for the survival of organizations, so it needs to be implemented effectively. Therefore, in this study, an attempt was made to propose a fuzzy model using fuzzy logic to combine risk management parameters and finally obtain an output called risk management process index that shows the organization's success in the risk management process. In this study, four main parameters were identified for the risk management process: risk identification, risk prioritization, strategy determination, and corrective actions. Some researchers such as Lemos (2001), Roth and Espersen (2004) attribute the success of risk management to the success of its formal processes of risk identification, risk analysis, risk response, and response planning, risk monitoring, and control.[30,31] Risk identification and prioritization parameters overlap to a large extent. Both are fundamentally dependent on management's decision about the need to take action, decide what to do, and take action.[20] Based on the results obtained from the fuzzy model, the risk management process should be done in such a way that all its parameters are considered equally, i.e., when two or three parameters are in a strong and excellent state but one of the parameters is in a weak state, have the work of the risk management process will be disrupted, and efficiency will be significantly reduced. The proposed fuzzy model has a high validity because the results show that when several diffusion methods are used, the results will not be different, and all will be in the same rank.[23] Risk identification parameter is one of the pillars of the risk management process, and successful risk management starts from risk identification, which allows avoiding negative

consequences. The risk identification parameter requires a thorough understanding of all possible threats.[32]

When many risks are identified in an organization, risks must be prioritized to determine the risk response and where limited resources should be used. Rational prioritization is a key component of a risk management plan and becomes a necessity when requirements are not fully met.[33] Parameters for determining strategy and implementing corrective actions are critical parameters of the risk management process. There is no standard format for determining strategy and implementing remedial action, but what is clear is that many accidents and occupational illnesses can be prevented if strategies are determined with high accuracy and sensitivity and eventually operationalized and their effectiveness evaluated[34]. The designed questionnaire was determined with four main factors to evaluate the risk management process. This questionnaire has high validity in that the content validity ratio (CVR) for this questionnaire is 0.89. Considering that the number of specialists who evaluated the questionnaire is ten, a minimum coefficient of 0.62 was accepted, which is the coefficient obtained is greater than this amount. The content validity index (CVI) must be greater than 0.79 to have an acceptable validity questionnaire, of which the index obtained (0.86) is higher.[29]In the quantitative face validity study, the impact score was calculated, and the results indicated an agreement above 79% and an impact score above 1.4. The interpretation that the item has a good face validity is easily understood, simple, expressive, and fluent for the sample group. The reliability of the questionnaire was assessed by measuring Cronbach's alpha coefficient, which is a very common method for questionnaires that use the Likert scale to answer. According to this method, a questionnaire has a good reliability with a Cronbach's alpha coefficient greater than 0.7.[30] Cronbach's alpha coefficient for this questionnaire was 0.713, which indicates its good reliability.

Conclusion

This study provides a systematic tool for evaluating the safety risk management process in the industry, which consists of 22 questions and is composed of 4 main parts. The validity of this questionnaire was assessed using the opinion of ten experts in the field of occupational safety and health, the results of which show its high validity. Also, this questionnaire was completed by 43 engineers of the safety department of the process industry in Iran, and its reliability was evaluated by measuring Cronbach's alpha coefficient, which results showed that the reliability of the questionnaire is good. The fuzzy logic method was used to obtain the final index. The information obtained from the fuzzy model shows that all four parameters of the risk management process must be implemented effectively and acceptably in order for risk management to be performed successfully. Using this tool, industry managers can evaluate the safety risk management process, identify the strengths and weaknesses of this process, and finally eliminate defects and continuous improvement because risk management is vital to prevent industrial accidents and occupational diseases.

Conflict of interest

No case reported by the authors.

Acknowledgments

This article is the result of a research project approved by the Tehran University of Medical Sciences with the ethics code IR.TUMS.SPH.REC.1396.3976 and the authors are grateful to the officials of Tehran University of Medical Sciences. Also, the authors thank all the experts who participated in this study.

References

1. Bedell D. Taking risk beyond regulation. Global finance. 2007;21(6):58-60.
2. Salen W. Risk management continues to gain international focus. Professional safety. 2008;53(12):50.
3. Rawls III SW, Smithson CW. Strategic risk management. Applied corporate finance. 1990;2(4):6-18.
4. ISO I. Risk management–principles and guidelines. International Organization for Standardization, Geneva, Switzerland. 2009.
5. Khan FI, Haddara MR. Risk-based maintenance of ethylene oxide production facilities. Hazardous materials. 2004;108(3): 147-59.
6. Aquila A. Best practices in risk management for firms. Accounting today. 2006;20(16):8-21.
7. Atkinson A. Risk management and Monte Carlo simulation: an illustration and cautionary tale. CMA management. 2005;79(9):36.
8. Feinberg P. Importance of risk management stressed. Pensions &investments. 1999;27(13):48.
9. Mehri H, Karimi A, Golbabaei F, SepahiZoeram F. The systematic analysis of factors affecting industrial crises management in process industries using the Fuzzy hierarchy process analysis approach. Archives of occupational health. 2018;2(4):199-208.
10. Stripling TE. Success requires embracing systematic risk management. Pipe line & gas industry. 2001;84(1):83-9.
11. Raz T, Michael E. Use and benefits of tools for project risk management. International journal of project management. 2001;19(1):9-17.
12. Ceniceros R. ERM growth rate slows, interest remains strong. Business insurance. 2008;42(17):3-63.
13. Kutsch E, Hall M. Deliberate ignorance in project risk management. International journal of project management. 2010;28(3):245-55.
14. Lifang X, Jun L. Case study on project risk management planning based on soft system methodology. [POSTER] at: International Conference on Multiple Criteria Decision Making;2009 June.21-26;Chengdu, China. Springer; 2009: 37-44.
15. Letens G, Van Nuffel L, Heene A, Leysen J. Towards a balanced approach in risk identification. Engineering management. 2008;20(3):3-9.
16. Gogin C, Johnson D. Stay focused on the intent. Accountancy. 2008;205(1):46-7.
17. Vose D. Quantitative risk analysis: a guide to Monte Carlo simulation modelling. John wiley& sons.1996.
18. Lee J, Chun J. Risk response analysis model for construction method using the forced-decision method and binary weighting analysis. Asian architecture and building engineering. 2009;8(1):205-12.
19. Stoneburner G, Goguen AY, Feringa A. Risk management guide for information technology systems. 2002.
20. Jaques T. Issue management and crisis management: An integrated, non-linear, relational construct. Public relations review. 2007;33(2):147-57.
21. Goguen J. LA Zadeh. Fuzzy sets. Information and control, vol. 8 (1965), pp. 338–353.-LA Zadeh. Similarity relations and fuzzy orderings. Information sciences, vol. 3 (1971), pp. 177–200. The journal of symbolic logic. 1973;38(4):656-7.
22. Mamdani EH. Application of fuzzy algorithms for control of simple dynamic plant.[POSTER] at: Proceedings of the institution of electrical engineers; 1974; IEEE.
23. Amindoust A, Ahmed S, Saghafinia A, Bahreininejad A. Sustainable supplier selection: A ranking model based on fuzzy inference system. Applied soft computing. 2012;12(6):1668-77.
24. Sivanandam S, Sumathi S, Deepa S. Introduction to fuzzy logic using MATLAB: Springer; 2007.
25. Ordoobadi SM. Development of a supplier selection model using fuzzy logic. Supply chain management: an international journal. 2009;14(4):314-27.
26. Safety CfCP. Guidelines for Risk Based Process Safety: John Wiley & Sons; 2010.
27. Polit DF, Beck CT, Owen SV. Is the CVI an acceptable indicator of content validity? Appraisal and recommendations. Research in nursing & health. 2007;30(4):459-67.
28. Gliem JA, Gliem RR. Calculating, interpreting, and reporting Cronbach's alpha reliability coefficient for Likert-type scales.2003 Midwest Research-to-Practice Conference in Adult, Continuing, and CommunityEducation;2003.
29. Kash TJ, Darling JR. Crisis management: prevention, diagnosis and intervention. Leadership & Organization Development. 1998;19(4):179-86.
30. De Lemos T, Betts M, Eaton D, de Almeida LT. Model for management of whole life cycle risk uncertainty in the private finance initiative (PFI). Project finance. 2001;6(4):68-80.
31. Roth J, Espersen D. Risk reflections: based on his extensive experience, David McNamee discusses the components that make up an effective system of risk management. Internal auditor. 2004;61(5):75-8.
32. Stosic B, Mihic M, Milutinovic R, Isljamovic S. Risk identification in product innovation projects: new perspectives and lessons learned. Technology analysis & strategic management. 2017;29(2):133-48.
33. Simpleman L, McMahon P, Bahnmaier B, Evans K, Lloyd J. Risk management guide for DOD acquisition. Defense Systems Management Coll Fort Belvoir Va. 1998.
34. Christensen WC. Safe Designs: A Challenge to SH&E Professionals. Professional Safety. 2010;55(04):29-34.